Polo estate 1998 ➤

Automatic gearbox 01M self-diagnosis									
Gearbox ID	CKY	DLV	DLW	DSV	ELH	EPM	EPS	FDJ	FDK

Edition 06.2001

Protected by copyright. Copying for private or commercial purposes, in part or in whole, is not permitted unless authorised by Volkswagen AG. Volkswagen AG does not guarantee or accept any liability with respect to the correctness of information in this document. Copyright by Volkswagen AG.

satelettronica

List of Workshop Manual Repair GroupsList of Workshop Manual Repair GroupsList of Workshop Manual Repair Groups

Polo estate 1998 ➤

Automatic gearbox 01M self-diagnosis

Repair Group

01 - Self-diagnosis, Electrical check

Protected by copyright. Copying for private or commercial purposes, in part or in whole, is not permitted unless authorised by Volkswagen AG. Volkswagen AG does not guarantee or accept any liability with respect to the correctness of information in this document. Copyright by Volkswagen AG.

satelettronica

Technical information should always be available to the foremen and mechanics, because their careful and constant adherence to the instructions is essential to ensure vehicle road-worthiness and safety. In addition, the normal basic safety precautions for working on motor vehicles must, as a matter of course, be observed.

All rights reserved.
No reproduction without prior agreement from publisher.

Copyright © 2011 Volkswagen AG, Wolfsburg

Contents

01 - Self-diagnosis, Electrical check 1
1 Self-diagnosis function 1
1.1 Self-diagnosis function 1
1.2 Self-diagnosis - Guide for automatic gearbox 4
2 Performing self-diagnosis 5
2.1 Performing self-diagnosis 5
3 Fault table 7
3.1 Fault table 7
4 Erasing fault memory 14
4.1 Erasing fault memory 14
5 Initiating basic setting 15
5.1 Initiating basic setting 15
6 Read measured value block 15
6.1 Read measured value block 15
6.2 Test table 17
7 End output 28
7.1 End output 28
8 Gearbox: Electrical check 28
8.1 Gearbox: Electrical check 28
8.2 Test table 31
9 Definitions 37
9.1 Definitions 37

Protected by copyright. Copying for private or commercial purposes, in part or in whole, is not permitted unless authorised by Volkswagen AG. Volkswagen AG does not guarantee or accept any liability with respect to the correctness of information in this document. Copyright by Volkswagen AG.
satelettronica

Protected by copyright. Copying for private or commercial purposes, in part or in whole, is not permitted unless authorised by Volkswagen AG. Volkswagen AG does not guarantee or accept any liability with respect to the correctness of information in this document. Copyright by Volkswagen AG.

satelettronica

01 - Self-diagnosis, Electrical check

1 - Self-diagnosis function

1.1 - Self-diagnosis function

The automatic gearbox is controlled electro-hydraulically.

The term "self-diagnosis" is specifically for the electronic/electric control.

Always perform a self-diagnosis before the fault search.

Additional information

- Workshop Manual Caddy 1996 ▸, Polo Classic 1996▸, Polo Estate 1998 ▸, Automatic gearbox 01M
- Current flow diagrams, Electrical fault finding and Fitting locationsbinder
- Self-study programme No.172.

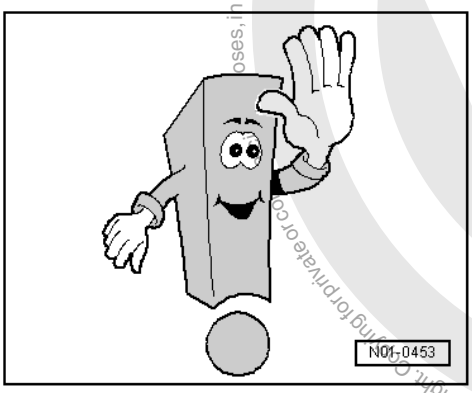

Data bus

Vehicles with data bus (from 10.99 ▸)

Comprehensive information on the "data bus" is given in self study programme No. 186.

Advantages:

- Rapid data transfer between the control units
- Less wiring in vehicle

The automatic gearbox control unit sends signals into the data bus and uses signals from it. It exchanges signals (information) with other control units.

Examples of signals from data bus (sent by engine control unit)

- Accelerator pedal position (throttle valve position)
- Kickdown
- Engine speed
- Engine torque

Examples of signals into data bus (used by engine control unit)

- Cruise control system

Protected by copyright. Copying for private or commercial purposes, in part or in whole, is not permitted unless authorised by Volkswagen AG. Volkswagen AG does not guarantee or accept any liability with respect to the correctness of information in this document. Copyright by Volkswagen AG.
satelettronica

- Ignition timing influences

Not only do the engine control units but also other control units exchange data with each other via the data bus, as in this example.

For example, the dash panel insert with diagnostic interface for data bus -J533- (or -J285-) receives the speed signal via the data bus from the automatic gearbox control unit.

It is often the case that other systems can be coded. If they are incorrectly coded, then the automatic gearbox control unit identifies signals from them as incorrect. In this way, faults will be detected which do not have their origin in the automatic gearbox although the faults are stored in its fault memory.

If the automatic gearbox control unit detects that signals are missing or faulty, the data bus itself, another diagnostic system or a component of that system may be defective.

Therefore, always perform self-diagnosis of affected control units.

The vehicle system test in the operating mode, "guided fault finding" is especially appropriate for this.

=> Operating instructions for Vehicle Diagnosis, Testing and Information System VAS 5051.

But it is also possible in the operating mode "self-diagnosis".

When using the current flow diagram to check the routing of wiring, please ensure that the data bus wiring is okay.

Functions of gearbox control unit

The automatic gearbox control unit -J217- receives information from components that effect selection of gears and passes the information on to the valve body solenoid valves which via hydraulic switching control the switch elements.

The control unit is equipped with a fault memory so that in the event of an electronic/electrical component failure or an open circuit the fault can be determined quickly. Fault are recognized by electrical signals and stored in the fault memory.

Control unit -J217- with driving situation gear changes (fuzzy logic)

Determining the driving situation and driving resistance dependent gear change point happens automatically.

Advantages:

- Gear changes will be consumption orientated
- Maximum engine output is always available
- Individual adaption of gear change points in all driving situations

Gearbox control unit fault recognition

The control unit recognizes faults during vehicle operation and stores them in a fault memory => Fault tables, from page 7

After analysing the information the control unit distinguishes between sporadic faults and faults present at this moment (static) and stores these.

If the fault is not present for a predetermined time or when driving over a longer distance, it is no longer recognized and becomes a sporadic fault.

A fault is also changed to a sporadic fault when the fault memory is not erased after repairs.

Sporadic faults will be displayed as "sporadically occurring faults" when the fault memory is interrogated.

Protected by copyright. Copying for private or commercial purposes, in part or in whole, is not permitted unless authorised by Volkswagen AG. Volkswagen AG does not guarantee or accept any liability with respect to the correctness of information in this document. Copyright by Volkswagen AG.
satelitronica

If the sporadic fault is not present for a predetermined time or when driving over a longer distance, the fault is erased in the fault memory.

Safety functions of gearbox control unit

If faults occur whilst driving, the control unit can activate supplementary functions or an emergency running programme. They can affect the quality and function of the gear changes.

If critical faults occur when driving, the gearbox will continue to operate in an emergency running mode. If the fault occurs in "D", "3" or "2", then 3rd gear emergency mode is activated.

If the fault occurs in "1","P", "N" or "R" then the emergency running mode for that stage is activated.

If the engine is started again in the emergency running mode and the fault occurs when selector lever is in position "D", "3" or "2" then 3rd gear is activated hydraulically, until the fault is rectified.

The gearbox will remain in emergency running mode; until the fault is no longer recognized by the control unit over a predetermined period.

Faults which may lead to emergency running:

Open circuit in wiring, short-circuit, electrical or hydraulic components defective.

Renewing control units

If control units are renewed, the system must be put into the basic setting => Page 15 , Initiating basic setting.

Vehicle diagnosis, testing and information system VAS 5051

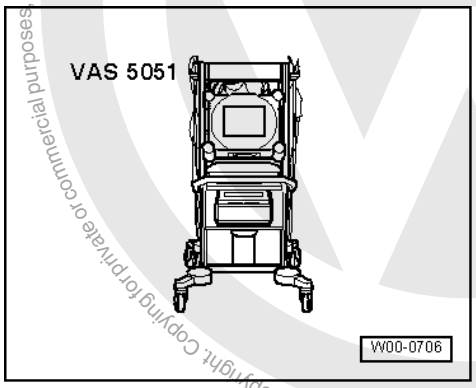

Electrical faults that affect vehicle performance can be determined with these devices.

The VAS 5051 offers beside self-diagnosis the "Guided fault finding" and "Measuring technology". Both are excellent for locating faults in the gearbox.

Self-diagnosis technical data

Memory	
-Permanent memory - Volatile memory	yes no
Data transfer between control units via: - single wires	up to 09.99
- Data bus	from 10.99
Final control diagnosis	no
Basic setting	yes
Coding control unit	no

satelettronica

1.2 - Self-diagnosis - Guide for automatic gearbox

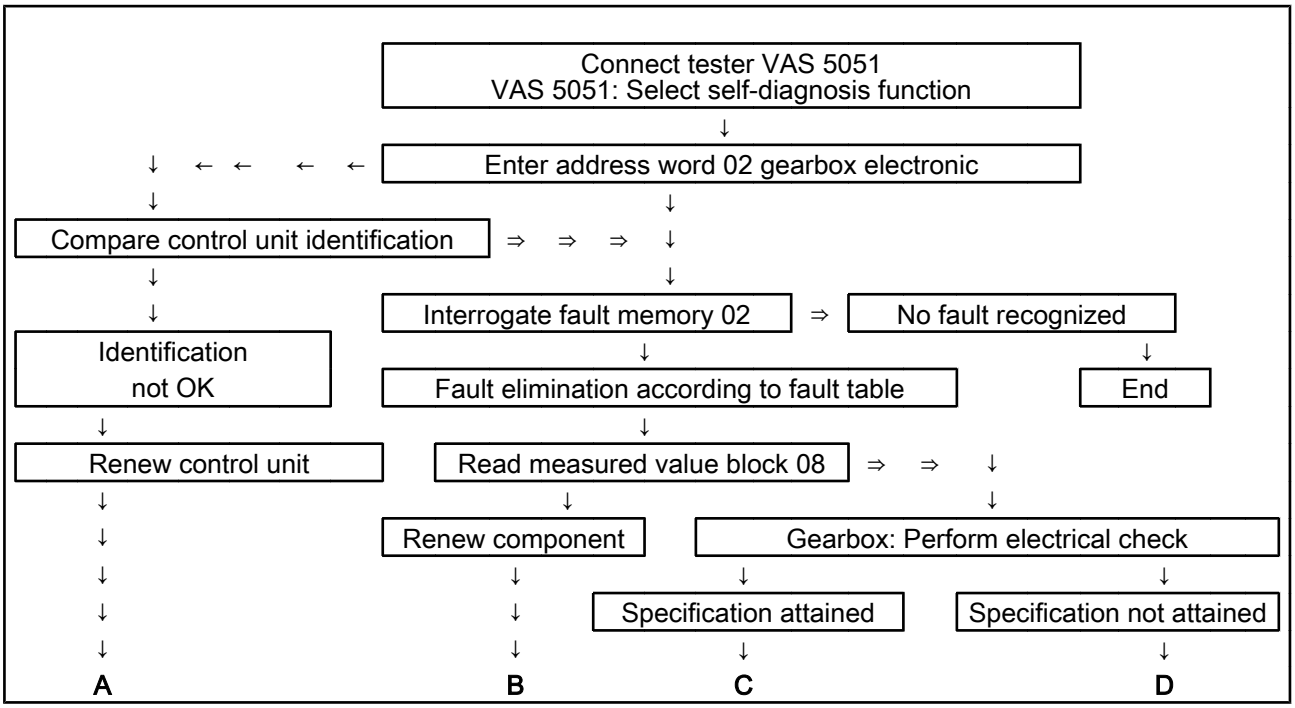

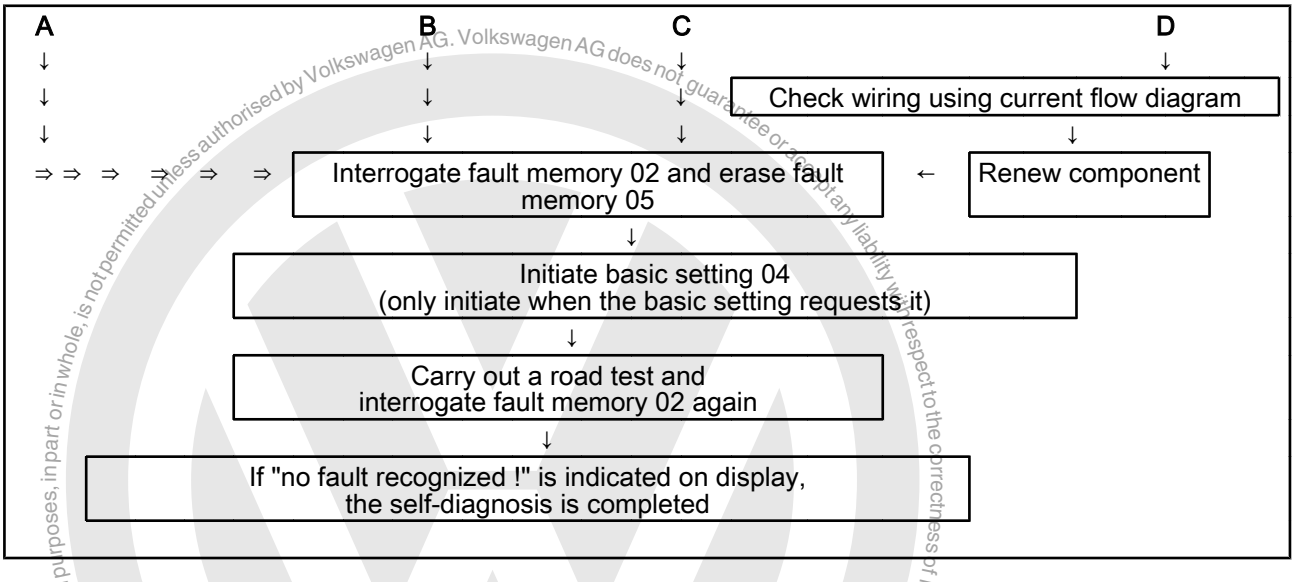

If after the self-diagnosis is completed, the automatic gearbox continues to operate with faults, then the cause can be.

found in the operating mode "guided fault finding".

You should also refer to the

=> "Fault finding" binder. Power transmission; No. 14

Protected by copyright. Copyright by Volkswagen AG. Volkswagen AG does not guarantee or accept any liability with respect to the correctness of information in this document. Copyright by Volkswagen AG. Reproduction, in part or in whole, is not permitted unless authorised by Volkswagen AG. Volkswagen AG does not guarantee or accept any liability with respect to the correctness of information in this document. Copyright by Volkswagen AG.
satelettronica

2 - Performing self-diagnosis

2.1 - Performing self-diagnosis

Warning!
- You must always secure testing and measuring equipment on the back s
- These devices may be operated only by a passenger during a test drive.

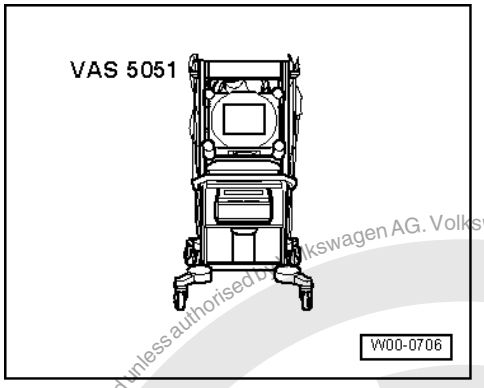

Special tools, workshop equipment, testers, measuring instruments and auxiliary items required

- VAS 5051 Vehicle diagnosis, testing and information system

Additional information

- Vehicle diagnosis, testing and information system VAS 5051; User's Handbook (order no. 7KE3180-1AE)
- Workshop Manual Caddy 1996 ▸, Polo Classic 1996 ▸, Polo Estate 1998 ▸, Automatic gearbox 01M
- Current flow diagrams, Electrical fault finding and Fitting locationsbinder
- Technical service handbook
- Parts catalogue

Test conditions:

- Selector lever in position "P" and handbrake applied.
- Vehicle voltage supply in order.
- All fuses according to current flow diagram OK (remove fuse from fuse holder to check).
- Fuses in main fuse box OK.
- Check earth connections for gearbox:

- Check earth connections for corrosion and poor contact; repair if necessary.
- Earth connection point is located in plenum chamber.

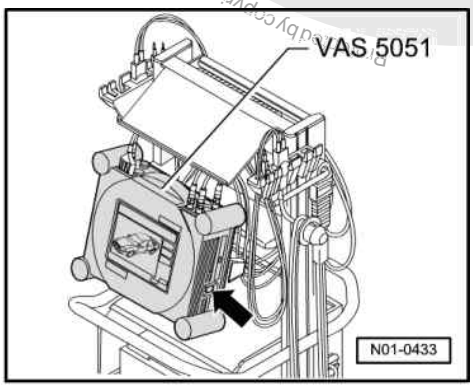

Copyright by Volkswagen AG. Volkswagen AG does not guarantee or accept any liability with respect to the correctness of information in this document. Copyright by Volkswagen AG. Reproduction, in part or in whole, for commercial purposes, is not permitted unless authorised by Volkswagen AG.
satelettronica

- Check battery earth strap and earth strap between battery and gearbox.

Connect vehicle diagnosis, testing and information system VAS 5051

- -> Switch on tester -arrow-.

The tester is operational when it displays a picture of a car.

- Connect diagnosis cable connector VAS 5051/1 or VAS 5051/3 to diagnosis connection.

Locations of diagnosis connections

The vehicle could have the diagnosis connection at various places depending on the year of manufacture. A clear indication of where the connection is located can be found in

=> Automatic gearbox 01M; Repair group 37; Electrical and electronic components and fitting locations Electrical and electronic components and fitting locations

- Switch on ignition.
- Touch the field "Vehicle Self-diagnosis" on the touch screen.

Example of screen display:

Vehicle self-diagnosis	
Select vehicle system	
00 - Interrogate fault memory - entire system	
01 - Engine electronics	
21 - Engine electronics I	
41 - Engine electronics II	
02 - Gearbox electronics	
65 - Tyre pressure monitoring	
03 - Brake system electronics	
23 - Brake servo	
12 - Clutch electronics	
44- Steering assistance	
" "	
" "	
" "	
Test instruments	Go to / Print / Help

You can press 00 - Interrogate fault memory - entire system. Then the tester will interrogate all fault memories.

When doing so, please observe the notes beginning => 2 .

If you want to select only the gearbox control unit:

- Press 02 - Gearbox electronics.

Now the following diagnosis functions (among others) will be displayed on the screen:

Diagnosis function overview

On the screen of the VAS 5051:	
02 - Interrogate fault memory	7
04 - Basic setting	15

Protected by copyright. Copying for private or commercial purposes, in part or in whole, is not permitted unless authorised by Volkswagen AG. Volkswagen AG does not guarantee or accept any liability with respect to the correctness of information in this document. Copyright by Volkswagen AG.
satelettronica

On the screen of the VAS 5051:		
05 -	Erase fault memory	14
06 -	End output	28
08 -	Read measured value block	15

Further functions in this display need not be considered.

Interrogating fault memory

- Press 02 - Interrogate fault memory.

-> The number of stored faults or "No fault recognised" appears in the display.

```
X Faults recognised!
```

- For a list of all faults, refer to => 7 .

Displayed on screen	
No fault recognised!	If "No fault recognised" appears after repairs are performed, the self-diagnosis is completed. In the event that the automatic gearbox does not shift properly despite self-diagnosis, the cause can be found using the operating mode "guided fault finding". Refer also to the => binder "Fault finding, Power transmission", No. 14

Control unit identification

The control unit identification is displayed at the top right of the screen after the gearbox control unit is selected in the operating mode "vehicle self-diagnosis".

Example
02 - Gearbox electronics
01M927733BQ(Part number)
AG4 Gearbox 01M 2857: 4-speed automatic gearbox 01M 2857; Program version
000(Coding;is not needed)
VAS 5051 operating number

3 - Fault table

3.1 - Fault table

Screen display	Possible cause of fault	Rectifying fault
00258 Solenoid valve 1 -N88- Open/short circuit to positive1) Short to earth1)	Wiring open or short circuit Solenoid valve 1 -N88- defective	- Check wiring and connections according to current flow diagram2) - Read measured value block =>page 15 ; display group number 004 - Perform electrical tests =>from page 28
00260 Solenoid valve 2 -N89-	Wiring open circuit or short to earth Solenoid valve 2 -N89- defective	- Check wiring and connections using current flow diagram 2) - Read measured value block =>page 15 ; display group number 004

Protected by copyright. Copying for private or commercial purposes, in part or in whole, is not permitted unless authorised by Volkswagen AG. Volkswagen AG does not guarantee or assume any liability with respect to the correctness of information in this document. Copyright by Volkswagen AG.
satelettronica

Open/short circuit to positive1) Short to earth1)		- Perform electrical tests =>from page 28

1) One of these displays appears in addition to relevant component.

2) First check connections for contact corrosion or water ingress and renew if necessary. If solenoid faults are displayed then especially check the 10 pin connector on gearbox between valve body conductor strip and wiring loom.

Screen display	Possible cause of fault	Rectifying fault
00262 Solenoid valve 3 -N90- Open/short circuit to positive1) Short to earth1)	Wiring open or short circuit Solenoid valve 3 -N90- defective	- Check wiring and connections according to current flow diagram2) - Read measured value block =>page 15 ; display group number 004 - Perform electrical tests =>from page 28
00264 Solenoid valve 4 -N91- Open/short circuit to positive1) Short to earth1)	Wiring open circuit or short to earth Solenoid valve 4 -N91- defective	- Check wiring and connections using current flow diagram 2) - Read measured value block =>page 15 ; display group number 004 - Perform electrical tests =>from page 28

1) One of these displays appears in addition to relevant component.

2) First check connections for contact corrosion or water ingress and renew if necessary. If solenoid faults are displayed then especially check the 10 pin connector on gearbox between valve body conductor strip and wiring loom.

Screen display	Possible cause of fault	Rectifying fault
00266 Solenoid valve 5 -N92- Open/short circuit to positive1) Short to earth1)	Wiring open or short circuit Solenoid valve 5 -N92- defective	- Check wiring and connections according to current flow diagram2) - Read measured value block =>page 15 ; display group number 004 - Perform electrical tests =>from page 28
00268 Solenoid valve 6 -N93- Open/short circuit to positive1) Short to earth1)	Wiring open or short circuit Solenoid valve 6 -N93- defective	- Check wiring and connections according to current flow diagram2) - Read measured value block =>page 15 ; display group number 002 - Perform electrical tests =>from page 28

1) One of these displays appears in addition to relevant component.

2) First check connections for contact corrosion or water ingress and renew if necessary. If solenoid faults are displayed then especially check the 10 pin connector on gearbox between valve body conductor strip and wiring loom.

Screen display	Possible cause of fault	Rectifying fault
00270 Solenoid valve 7 -N94-	Wiring open or short circuit Solenoid valve 7 -N94- defective	- Check wiring and connections using current flow diagram 2) - Read measured value block =>page 15 ; display group number 004

satelettronica

Open/short circuit to positive1) Short to earth1)		- Perform electrical tests =>from page 28

1) One of these displays appears in addition to relevant component.

2) First check connections for contact corrosion or water ingress and renew if necessary. If solenoid faults are displayed then especially check the 10 pin connector on gearbox between valve body conductor strip and wiring loom.

Screen display	Possible cause of fault	Rectifying fault
00281 Road speed sender -G68- No signal	Open circuit in wiring Road speed sender -G68- defective	- Check wiring and connections using current flow diagram1) - Read measured value block =>page 28 - Renew road speed sender -G68- => Automatic gearbox 01M; Repair group 37; Electrical and electronic components and fitting locations Electrical and electronic components and fitting locations

1) First check connectors for contact corrosion or water ingress and renew if necessary.

Screen display	Possible cause of fault	Rectifying fault
00293 Multifunction switch -F125- Undefined switch condition	Wiring open circuit Multifunction switch -F125- defective	- Check wiring and connections using current flow diagram 1) - Read measured value block =>page 15 ; display group number 001 - Renew multifunction switch -F125- => Automatic gearbox 01M; Repair group 37; Electrical and electronic components and fitting locations Electrical and electronic components and fitting locations

1) First check connectors for contact corrosion or water ingress and renew if necessary.

Screen display	Possible cause of fault	Rectifying fault
00297 Gearbox speed sender -G38- No signal2)	Wiring open circuit Gearbox speed sender -G38- defective	- Check wiring and connections using current flow diagram1) - Perform electrical check =>from page 28 Replace gearbox speed sender -G38- => Automatic gearbox 01M; Repair group 37; Electrical and electronic components and fitting locations Electrical and electronic components and fitting locations

Protected by copyright. Copying for private or commercial purposes, in part or in whole, is not permitted unless authorised by Volkswagen AG. Volkswagen AG does not guarantee or accept any liability with respect to the correctness of information in this document. Copyright by Volkswagen AG.
satelettronica

Implausible signal2)	If the control unit recognises an implausible signal, the connectors for gearbox speed sender -G38- and road speed sender -G68- are interchanged	

1) First check connectors for contact corrosion or water ingress and renew if necessary.

2) One of these displays appears in addition to relevant component.

Screen display	Possible cause of fault	Rectifying fault
00300 Gearbox oil temperature sender -G93-1) No fault detected	Wiring open circuit Gearbox oil temperature sender -G93- defective	- Check wiring and connections according to current flow diagram2) - Read measured value block =>page 15 ; Display group number 005 - Perform electrical check =>from page 28 - Renew conductor strip => Automatic gearbox 01M; Repair group 38; Removing and installing valve chest Removing and installing valve chest

1) A faulty ATF temperature sender is indicated.

2) First check connections for contact corrosion or water ingress and renew if necessary. If solenoid faults are displayed then especially check the 10 pin connector on gearbox between valve body conductor strip and wiring loom.

Screen display	Possible cause of fault	Rectifying fault
00518 Throttle valve potentiometer -G69- Signal outside tolerances	Wiring open or short circuit Defective engine control unit or defective throttle valve potentiometer -G69- (in throttle valve control part) On vehicles with TDI and SDI engine or 4-cylinder engine with Simos or Motronic injection and ignition system, the signal from throttle valve potentiometer -G69- is transmitted via engine control unit to gearbox control unit. It can only be checked in measured value block. If a faulty throttle valve potentiometer is indicated by the self-diagnosis, then also always carry out a self-diagnosis on engine control unit.	- If in addition fault 00638 is displayed, then rectify this first Check wiring and connections according to CFD - Read measured value block =>page 15

Screen display	Possible cause of fault	Rectifying fault
00529	Open circuit in wiring	- Check wiring and connections according to CFD

Protected by copyright. Copying for private or commercial purposes, in part or in whole, is not permitted unless authorised by Volkswagen AG. Volkswagen AG does not guarantee or accept any liability with respect to the correctness of information in this document. Copyright by Volkswagen AG.

satelettronica

Speed information missing		- Read measured value block =>page 15 ; display group numbers 003 Check engine control unit => Repair group 01 for relevant engine code
00532 Supply voltage	Battery defective Insufficient system voltage for valves	- Test battery voltage => Repair group 27 - Read measured value block =>page 28

Screen display	Possible cause of fault	Rectifying fault
00545 Engine/gearbox electrical connection Open circuit1) Short to earth1) Open circuit/short to earth1)	Wiring open circuit or short earth No engine/gearbox control unit connection The signal for influencing the ignition timing point is not transferred or transferred erroneously between engine and gearbox control unit	- Check wiring and connectors according to current flow diagram - Read measured value block =>Page 15
00596 Short circuit between valve wires	Connector between valve chest conductor strip and wiring loom Conductor strip to valve chest defective	- Check wiring and connections using current flow diagram 2) - Conduct electrical test =>from page 28 Renew conductor strip => Automatic gearbox 01M; Repair group 38; Removing and installing valve chest Removing and installing valve chest

1) One of these displays appears in addition to relevant component.

2) First check connections for contact corrosion or water ingress and renew if necessary. If solenoid faults are displayed then especially check the 10 pin connector on gearbox between valve body conductor strip and wiring loom.

Screen display	Possible cause of fault	Rectifying fault
00638 Engine/gearbox electrical connection 2 No signal	Wiring open circuit or short to earth No engine/gearbox control unit connection Throttle valve signal not transferred to gearbox control unit	- Check wiring and connections according to CFD - Read measured value block =>Page 15

Screen display	Possible cause of fault	Rectifying fault
00641 ATF temperature Signal too high1) No fault type recognised1)	Gearbox becomes too hot, max. 148° C. If ATF temperature is too high, gearbox shifts down into next lower gear. Trailer load of vehicle too high ATF level not OK Gearbox oil temperature sender - G93- defective	- Check ATF level => Automatic gearbox 01M; Repair group 37; Checking and topping up ATF level 15 ; display group number 005; Reading ATF temperature - Check wiring and connections according to current flow diagram Renew conductor strip

Protected by copyright. Copyright Volkswagen AG. Volkswagen AG does not guarantee or accept any liability with respect to the correctness of information in this copy (in whole or in part) of the original German version of this document. This copy is for private or commercial purposes only, in part or in whole, is not permitted unless authorised by Volkswagen AG.
satelettronica

Screen display	Possible cause of fault	Rectifying fault
		=> Automatic gearbox 01M; Repair group 38; Removing and installing valve chest Removing and installing valve chest

1) One of these displays appears in addition to relevant component.

Screen display	Possible cause of fault	Rectifying fault
00652 Gear monitoring Implausible signal	Electrical/hydraulic fault Clutch or valve chest defective	- Read measured value block =>page 15 ; display group number 004 and establish by driving in which gear the fault occurs
00660 Kickdown switch/throttle valve potentiometer	Open circuit in wiring	- Check wiring and connections according to CFD
	Throttle valve potentiometer -G69- defective	- Perform repairs as described in "Rectifying fault" 00518 -Throttle valve potentiometer -G69-
Implausible signal	Kickdown switch -F8- defective	- Read measured value block => page 28 Adjust or renew throttle cable => Repair group 24 of respective engine code

Screen display	Possible cause of fault	Rectifying fault
00777 Accelerator pedal position sender -G79- No signal	Wiring open circuit Engine control unit notes that signal is faulty and then sends it into data bus	- Check engine control unit => Repair group 01; of respective engine code - Read measured value block =>Page 15 ; Display group number 002 Check wiring and connectors using current flow diagram
01166 Engine torque signal Implausible signal	Fault of engine or its components, e.g. EPC Engine control unit incorrectly coded Engine control unit incorrectly coded Fault in engine or its components, e.g. EPC	- If additionally the faults: 01312 or 01314 are displayed, these must be rectified first Check wiring and connections using current flow diagram, incl. data bus wiring - Check engine control unit => Repair group 01; of respective engine code

Screen display	Possible cause of fault	Rectifying fault
01192 Torque converter lock-up clutch Mechanical fault	Wiring open circuit Lock-up clutch slips Solenoid valve 4 -N91- defective Valve chest defective	- Check wiring and connections according to current flow diagram - Read measured value block =>page 15 ; Display group number 007 => Automatic gearbox 01M; Repair group 38; Removing and installing valve chest Removing and installing valve chest

Protected by copyright. Copyright by Volkswagen AG. Volkswagen AG does not assume or accept any liability with respect to the correctness of information in this document. Copying for private or commercial purposes, in part or in whole, is not permitted unless authorised by Volkswagen AG.
satelettronica

01236 Selector lever lock solenoid -N110- Open circuit/short to earth	Wiring open circuit or short to earth Selector lever lock solenoid -N110- defective	- Check wiring and connections using current flow diagram - Read measured value block =>page 15 ; Display group number 005 => Automatic gearbox 01M; Repair group 37; Electrical and electronic components and fitting locations Electrical and electronic components and fitting locations

Screen display	Possible cause of fault	Rectifying fault
01312 Drive train data bus defective1) no communication1)	Data bus wiring/connectors defective	- Check data bus wiring and connectors using current flow diagram
01314 Engine control unit No communication1)	Data bus wiring/connectors defective Fault in system: Engine	- Check data bus wiring and connectors using current flow diagram Check engine control unit => Repair group 01 for relevant engine code
Incorrect equipment 1)	Engine control unit incorrectly coded	
01316 Brake control unit No communication	Data bus wiring or connections defective	- Check data bus wiring and connections using current flow diagram

1) One of these displays appears in addition to relevant component.

Screen display	Possible cause of fault	Rectifying fault
65535 Control unit defective	Control unit -J217- defective	- Renew control unit => Automatic gearbox 01M; Repair group 37; Electrical and electronic components and fitting locations Electrical and electronic components and fitting locations - Initiate basic settings => page 15

The control unit -J217- should not be renewed until the possible cause of the fault has been determined and the following faults have been rectified:

- mechanical faults
- hydraulic faults
- all affected electrical/electronic components and cable connections.

If control unit -J217- is to be renewed

=> Automatic gearbox 01M; Repair group 37; Electrical and electronic components and fitting locations Electrical and electronic components and fitting locations

Protected by copyright. Copying for private or commercial purposes, in part or in whole, is not permitted unless authorised by Volkswagen AG. Volkswagen AG does not guarantee or assume any liability with respect to the correctness of information in this document. Copyright by Volkswagen AG.
satelettronica

4 - Erasing fault memory

4.1 - Erasing fault memory

Requirement:

- Fault memory interrogated => 7 .

- Connect VAS 5051 and continue to switch until the diagnosis functions are displayed => Performing self-diagnosis; 5 .
- Press 05 - Erase fault memory.

-> Indicated on display:

```
Warning!
Fault memory was not interrogated.
```

If the ignition was switched off e.g. between interrogating the fault memory and erasing fault memory, the fault memory is then not erased.

- Adhere strictly to the sequence of operations, i.e. first of all interrogate fault memory.

-> Indicated on display:

```
Fault memory could not be erased
```

If one or more faults are present.

- Interrogate fault memory => 7 .

-> Indicated on display:

```
Fault memory is erased!
```

(The fault memory will be erased approx. 5 seconds. after the display appears.)

The fault memory is now erased.

- Switch off ignition.

Wait about 1 minute before again interrogating the fault memory.

-> Indicated on display:

```
00811      3333
System not interrogated
```

Control unit -J217- was not given sufficient time to recognize faults.

- Wait about 1 minute before again interrogating the fault memory.
- After interrogating and erasing the fault memory, carry out a test drive and again interrogate the fault memory.

When the fault memory is interrogated, the following display should appear:

"No fault recognized!"

Protected by copyright. Copying for private or commercial purposes, in part or in whole, is not permitted unless authorised by Volkswagen AG. Volkswagen AG does not guarantee or accept any liability with respect to the correctness of information in this document. Copyright by Volkswagen AG.

satelettronica

5 - Initiating basic setting

5.1 - Initiating basic setting

The basic setting should be initiated after performing the following repairs:

- Exchanging engine
- Replacing or coding engine control unit
- Removing and installing gearbox
- Removing and installing valve chest
- Removing and installing "electronic accelerator"
- Replacing throttle valve potentiometer -G69-
- Altering throttle valve potentiometer -G69- setting e.g. when adjusting idling switch (engine)
- Removing and installing throttle cable with kick-down switch
- Replacing automatic gearbox control unit -J217-

- Read also:

=> "Special Information Bulletins" binder; Engine; No. 4

If the ATF level is correct, complaints about shift quality can, in part, also be rectified with "Basis setting".

- Connect VAS 5051 and continue to switch until the diagnosis functions are displayed => Performing self-diagnosis; 5 .
- Press 04 - Basic setting.
- Press key 0, 0 and 0.
- Confirm entry with key Q.
- Depress accelerator pedal past kickdown to stop and hold in this position for 3 seconds.

No further display appears on tester.

The system is now in the basic setting.

6 - Read measured value block

6.1 - Read measured value block

Additional information

- Workshop Manual Caddy 1996 ▸, Polo Classic 1996▸, Polo Estate 1998 ▸, Automatic gearbox 01M
- Current flow diagrams, Electrical fault finding and Fitting locationsbinder

- Connect VAS 5051 and continue to switch until the diagnosis functions are displayed => Performing self-diagnosis; 5 .
- Press 08 - Read measured value block
- Press the number for the display group that you want to see.
- Enter display group number => List of selectable display group numbers, 15 .
- Confirm entry with key Q.
- There are always 4 display zones in the measured value block (if necessary, in physical quantities). Interpreting the values in display zones 1 to 4 =>Test table 17 .

List of selectable display group numbers

Indicated on display (example)			
Display zones are ordered vertically	Display group No.	Display zone	Description

satelettronica

Indicated on display (example)			
Read measured value block P 0.8 V 0% 00000111	001	1 2 3 4	Selector lever position Throttle valve potentiometer voltage Accelerator pedal value Switch positions
Read measured value block 0.983 A 0.985 A 12.76 V 2.50 V	002	1 2 3 4	Solenoid valve 6 -N93- actual current Solenoid valve 6 -N93- specified current Battery voltage Voltage at road speed sender -G68-
Read measured value block 0 km/h 900 rpm 0 0%	003	1 2 3 4	Speed Engine speed Gear selected Accelerator pedal value
Read measured value block 1000 00 0 P 0 km/h	004	1 2 3 4	Solenoid valves Gear selected Selector lever position Speed

Indicated on display (example)			
Display zones are ordered vertically	Display group No.	Display zone	Description
Read measured value block 40° C 0011011 0 900 rpm	005	1 2 3 4	ATF temperature Selector outputs Gear to be selected Engine speed
Read measured value block +/- 0.8% 008% 008% 030%	006	1 2 3 4	Can be disregarded Driving resistance, calculated as a gradient Hill factor Sports factor Accelerator pedal value
Read measured value block 1H +/- 200 rpm 900 rpm 0%	007	1 2 3 4	Gear selected (+ or - sign relates to display zone 2) Lock-up clutch slip Engine speed Accelerator pedal value

Fitted only in vehicles with data bus

Indicated on display (example)			
Display zones are ordered vertically	Display group No.	Display zone	Description
Read measured value block 0% 0% 0% 00000000	010	1 2 3 4	Can be disregarded Throttle valve value Accelerator pedal value (without CCS) Accelerator pedal value (with CCS) Switch positions
Read measured value block Engine 1 ABS 1 Combi 1	125	1 2 3 4	Can be disregarded Engine to data bus ABS to data bus Combi to data bus

satelettronica

6.2 - Test table

Display Group No.	Display zone	Designation	Test conditions		VAS 5051 display specification	Rectifying fault
001	1	Selector lever position, multi-function switch -F125-	Stationary	P	P	- Check and adjust selector lever cable => Automatic gearbox 01M; Repair group 37; Checking and adjusting selector lever cable Checking and adjusting selector lever cable
			Selector lever	R	R	
				N	N	- Renew multi-function switch -F125- => Automatic gearbox 01M; Repair group 37; Electrical and electronic components and fitting locations Electrical and electronic components and fitting locations
			in	D	D	
				3	3	
				2	2	
cont'd				1	1	

Display Group No.	Display zone	Designation	Test conditions	VAS 5051 display specification	Rectifying fault
001	2	Vehicles without data bus Voltage of throttle valve potentiometer -G69-	Idling min. Idling max. ▪ Engine switched off ▪ Ignition switched on	0.156 V 0.8 V1)	During acceleration from idling to full throttle, voltage figure increases continuously Initiate basic setting => page 28
			Full throttle min. Full throttle max.	3.5 V 4.680 V	- Adjust or renew, if necessary, throttle valve potentiometer
cont'd					=>Repair groups 24 through 25 of respective engine code

1) Engine with Mono Motronic coolant temperature min. 80° C.

2) On these vehicles the signal from throttle valve potentiometer -G69- is directed via engine control unit to gearbox control unit

Protected by copyright. Copyright by Volkswagen AG.
Volkswagen AG does not guarantee or accept any liability with respect to the correctness of information in this document. Copyright by Volkswagen AG.
Copying for private or commercial purposes, in part or in whole, is not permitted unless authorised by Volkswagen AG.
satelettronica

Display Group No.	Display zone	Designation	Test conditions	VAS 5051 display specification	Rectifying fault
001	2	Vehicles with data bus Signal from throttle valve potentiometer -G69-	Idling	0 V	During acceleration from idling to full throttle, voltage figure increases continuously Initiate basic setting => page 15
cont'd			Full throttle max.	5 V	- Perform self-diagnosis of respective engine Adjust throttle valve potentiometer, renew if necessary => Repair groups 24 through 25 of respective engine code

Display Group No.	Display zone	Designation	Test conditions	VAS 5051 display specification	Rectifying fault
001	3	Accelerator pedal value	Stationary Idling1)	0...1 %	When accelerating from idling to full throttle, % figure constantly increases
			Full throttle	99...100 %	- Initiate basic setting =>Page 15
	4	Switch positions Brake light switch -F- Display 1	Brake Operated	1	- Check brake light switch -F- => Perform electrical tests,from page 28
			Not operated	0	
		Traction control system 2	Activated	1	Can be disregarded
cont'd			Not activated	0	

1) Engine with Mono Motronic coolant temperature min. 80° C.

Display Group No.	Display zone	Designation	Test conditions	VAS 5051 display specification	Rectifying fault
001	4	3	Can be disregarded		
		Kickdown switch -F8- Display 4	Kickdown Operated	1	- Check kickdown switch =>Perform electrical check, from page 28
			Not operated	0	

Protected by copyright. Copying for private or commercial purposes, in part or in whole, is not permitted unless authorised by Volkswagen AG. Volkswagen AG does not guarantee or accept any liability with respect to the correctness of information in this document. Copyright by Volkswagen AG.
satelettronica

Protected by copyright. Copying for private or commercial purposes, in part or in whole, is not permitted unless authorised by Volkswagen AG. Volkswagen AG does not guarantee or accept any liability with respect to the correctness of information in this document. Copyright by Volkswagen AG.

Display Group No.	Display zone	Designation		Test conditions		VAS 5051 display specification	Rectifying fault
		Multi-function switch -F125-	5	Selector lever in	R, N, D, 3, 2	1	- Renew multi-function switch -F125- => Automatic gearbox 01M; Repair group 37; Electrical and electronic components and fitting locations Electrical and electronic components and fitting locations
					P, 1	0	
			6	Selector lever in	P, R, 2, 1	1	
cont'd					N, D, 3	0	

Display Group No.	Display zone	Designation		Test conditions		VAS 5051 display specification	Rectifying fault
001	4	Multi-function switch -F125-	Display 7	Selector lever in	P, R, N, D	1	- Renew multi-function switch -F125- => Automatic gearbox 01M; Repair group 37; Electrical and electronic components and fitting locations Electrical and electronic components and fitting locations
					3, 2, 1	0	
			8	Selector lever in	P, R, N,	1	
					D, 3, 2, 1	0	

Display Group No.	Display zone	Designation	Test conditions	VAS 5051 display specification	Rectifying fault
002	1	Solenoid valve 6 - N93- actual current	▪ Selector lever in "N" ▪ Stationary Full throttle	0.0 A	Note the following when fault finding: Actual current and specified current must not deviate more than 0.050 A from one another.
			Idling max.	1.1 A	The specifications shown here are the maximum values.
	2	Solenoid valve 6 - N93- specified current	▪ Selector lever in "N" ▪ Stationary Full throttle	0.0 A	Initiate basic setting=>page 15
cont'd			Idling max.	1.1 A	- Check solenoid valve - N93- => Perform electrical check, from page 28

satelettronica

Display Group No.	Display zone	Designation	Test conditions		VAS 5051 display specification	Rectifying fault
002	3	Battery voltage	Stationary	min.	10.8 V	- Check battery, renew if necessary Check voltage supply to control unit -J217- => Perform electrical check, from page 28
				max.	16.0 V	- Renew gearbox control unit -J217- => Automatic gearbox 01M; Repair group 37; Electrical and electronic components and fitting locations Electrical and electronic components and fitting locations
cont'd						- Initiate basic setting => page 15

Display Group No.	Display zone	Designation	Test conditions		VAS 5051 display specification	Rectifying fault
002	4	Road speed sender -G68-	Stationary	min.	2.20 V	- Check road speed sender -G68- =>Perform electrical check, from page 28
				max.	2.52 V	
003	1	Vehicle speed	Driving1)		...km/h	Speedometer reading and values on VAS 5051 may differ slightly.
cont'd	2	Engine speed	With engine running		...rpm	- Tune engine if necessary => Repair Groups 24 to 25 of respective engine code

1) When driving, a second mechanic is needed for reading the specified values.

Display Group No.	Display zone	Designation	Test conditions		VAS 5051 display specification	Rectifying fault
003	3	Gear selected	Driving1)	Neutral	0	- Check solenoid valves => Perform electrical check, from page 28
				Reverse	R	
				1 hydraulic	1H	
				1 mechanical	1M	
				2 hydraulic	2H	
				2 mechanical	2M	
				3 hydraulic	3 H	
				3 mechanical	3M	
				4 hydraulic	4H	

Protected by copyright. Copying for private or commercial purposes, in part or in whole, is not permitted unless authorised by Volkswagen AG. Volkswagen AG does not guarantee or accept any liability with respect to the correctness of information in this document. Copyright by Volkswagen AG.
satelettronica

Display Group No.	Display zone	Designation	Test conditions	VAS 5051 display specification	Rectifying fault
			4 mechanical	4M	
	4	Accelerator pedal value	Driving1) Idling	0...1 %	When accelerating from idling to full throttle, % figure constantly increases
			Full throttle	99...100 %	- Initiate basic setting => page 15

1) When driving, a second mechanic is needed for reading the specified values.

Reading measured value block; Display group number 004; "Checking solenoid valves whilst driving"

- The solenoid valves can be checked whilst driving via "Read measured value block 08"; "Display group number 004". A second mechanic is required for the read out whilst driving.
- The table shows the solenoid valves -N88-, -N89- and -N90- as activated in each selector lever position. These solenoid valves control the switching valves to the relevant gears.
- The solenoid valve -N91- activates the lock-up clutch modulation valve and is not covered here.
- The solenoid valves -N92- and -N94- are valves which ensure a smooth gear shift and are only activated during gear shifts and displayed in zones 5 and 6. They can show "0" or "1", depending on driving situation.
- VAS 5051 display zone 1 has 6 characters (0000 00):

Display on VAS 5051 Display group number 04 - zone 1:					
Display 1	Display 2	Display 3	Display 4	Display 5	Display 6
Solenoid 1 -N88-	Solenoid 2 -N89-	Solenoid 3 -N90-	Solenoid 4 -N91- (may be disregarded)	Solenoid 5 -N92-	Solenoid 7 -N94-

- Non-activated solenoid valves display "0" and activated solenoid valves display "1".
- All solenoid valves are checked via self-diagnosis => Interrogating fault memory, page 7 .

Checking solenoid valves, whilst driving

Display Group No.	Display zone	Designation	Test conditions	VAS 5051 display specification	Rectifying fault
004	1	Solenoid valves/indicated on	P	1 0 1 0 00	Solenoid valves are switched according to driving condition
		VAS 5051 display	R1)	0 0 1 0 00	- Perform
			N	1 0 1 0 00	electrical check
		-N88- Display 1	D1) 1H	0 0 1 0 00	=>from page 28
		-N89- Display 2	1M	0 0 1 0 00	- Continue fault finding according to fault finding programme
		-N90- Display 3	2H	0 1 1 0 00	
		-N91- Display 4	2M	0 1 1 0 00	=> "Fault finding.
		-N92- Display 5	3H	0 0 0 0 01	Power transmission"; No. 14
		-N94- Display 6	3M	0 0 0 0 01	
			4H	1 1 0 0 01	

satelettronica

Display Group No.	Display zone	Designation	Test conditions	VAS 5051 display specification	Rectifying fault
continued			4M	1 1 0 0 01	

1) Whilst driving with gears selected a second mechanic is required for reading the specified values.

Display Group No.	Display zone	Designation	Test conditions	VAS 5051 display specification	Rectifying fault
004	1	Solenoid valves/indicated on	31) 1H	0 0 1 0 00	Solenoid valves are switched according to driving condition
		VAS 5051 display:	1M	0 0 1 0 00	- Perform
		-N88- Display 1	2H	0 1 1 0 00	electrical check
		-N89- Display 2	2M	0 1 1 0 00	=>from page 28
		-N90- Display 3	3H	0 0 0 0 01	- Continue fault finding according to
		-N91- Display 4	3M	0 0 0 0 01	fault finding programme
		-N92- Display 5	21) 1H	0 0 1 0 00	=>"Fault finding.
		-N94- Display 6	1M	0 0 1 0 00	Power transmission"; No. 14
			2H	0 1 1 0 00	
			2M	0 1 1 0 00	
			11) 1H	0 0 1 0 00	
cont'd			1M	0 0 1 0 00	

1) Whilst driving with gears selected a second mechanic is required for reading the specified values.

Display Group No.	Display zone	Designation	Test conditions	VAS 5051 display specification	Rectifying fault
004	2	Gear selected	Driving1) Neutral	0	- Check solenoid valves => Perform electrical check, from page 28
			Reverse	R	
			1 hydraulic	1H	
			1 mechanical	1M	
			2 hydraulic	2H	
			2 mechanical	2M	
			3 hydraulic	3 H	
			3 mechanical	3M	
			4 hydraulic	4H	
cont'd			4 mechanical	4M	

1) When driving, a second mechanic is needed for reading the specified values.

Protected by copyright. Copying for private or commercial purposes, in part or in whole, is not permitted unless authorised by Volkswagen AG. Volkswagen AG does not guarantee or accept any liability with respect to the correctness of information in this document. Copyright by Volkswagen AG.
satelettronica

Display Group No.	Display zone	Designation	Test conditions		VAS 5051 display specification	Rectifying fault
004	3	Selector lever position	Whilst driving1)	P	P	- Check and adjust selector lever cable
				R	R	=> Automatic gearbox 01M; Repair group 37; Checking and adjusting gate change cable Checking and adjusting gate change cable
				N	N	
				D	D	
				3	3	- Check multi-function switch =>Perform electrical check, from Page 28
				2	2	
				1	1	
	4	Vehicle speed	Speed at which vehicle is driven1)		...km/h	The speedometer reading and VAS 5051 display may differ slightly

1) When driving, a second mechanic is needed for reading the specified values.

Display Group No.	Display zone	Designation	Test conditions	VAS 5051 display specification	Rectifying fault
005 cont'd	1	ATF temperature; ATF level is checked at about 35°C - 45°C	Stationary with engine running. The exact temperature is displayed from about 30°C	...°C	- Check gearbox oil temperature sender -G93- => Perform electrical check, from page 28

Display Group No.	Display zone	Designation	Test conditions	VAS 5051 display specification	Rectifying fault
005	2	Selector outputs	Whilst driving1) Ignition timing influence (only operative during gear shifts)		- Check wiring using current flow diagram Check engine control unit => Repair group 01 of respective engine code
		Display 12)	is switched on	1	- Renew engine control unit if necessary
			is switched off	0	- Renew gearbox control unit -J217- => Automatic gearbox 01M; Repair group 37; Electrical and electronic components and fitting locations Electrical and electronic components and fitting locations

Protected by copyright. Copying for private or commercial purposes, in part or in whole, is not permitted unless authorised by Volkswagen AG. Copyright by Volkswagen AG. Volkswagen AG does not guarantee or accept any liability with respect to the correctness of information in this document.
satelettronica

Protected by copyright. Copying for private or commercial purposes, in part or in whole, is not permitted unless authorised by Volkswagen AG. Volkswagen AG does not guarantee or accept any liability with respect to the correctness of information in this document. Copyright by Volkswagen AG.

cont'd					- Initiate basic settings => page 15

1) When driving, a second mechanic is needed for reading the specified values.

2) VAS 5051 must always show the same number, "1" or "0", in displays 1 and 2. Can be disregarded on vehicles with data bus!

Display Group No.	Display zone	Designation	Test conditions	VAS 5051 display specification	Rectifying fault
005	2	Selector outputs			- Renew gearbox control unit -J217- => Automatic gearbox 01M; Repair group 37; Electrical and electronic components and fitting locations 15
		Display 22)	will be switched on	1	
			will be switched off	0	
		3	Selector lever lock solenoid -N110- is switched on	1	- Check wiring using current flow diagram - Check selector lever lock solenoid -N110- => Perform electrical check, from page 28
			is switched off	0	
		4	switched on	1	
cont'd			switched off	0	

2) VAS 5051 must always show the same number "1" or "0" in displays 1 and 2.

Display Group No.	Display zone	Designation	Test conditions	VAS 5051 display specification	Rectifying fault
005	2	Selector outputs	Cruise control system		- Check wiring using current flow diagram
		Display 5	switched on	1	- Check cruise control system => Current flow diagrams, Electrical fault finding and Fitting locations binder
cont'd			switched off	0	

Display Group No.	Display zone	Designation	Test conditions		VAS 5051 display specification	Rectifying fault
005	2	Selector outputs Display 6	Air conditioner	will be switched off	1	Check routing of wiring on basis of current flow diagram
				will not be switched off	0	- Check air conditioner => Heating, Air conditioning; Repair Group 87

satelettronica

cont'd.		7	Park/Neutral signal Selector lever in		- Check wiring on basis of current flow diagram
			P, N	1	
			R	0	
			D, 3, 2, 1	1 / 0	Selector lever positions D, 3, 2, 1 can be disregarded

Display Group No.	Display zone	Designation	Test conditions		VAS 5051 display specification	Rectifying fault
005	3	Gear to select	Driving1)	Neutral	0	- Check solenoid valves => Perform electrical check, from page 28
				Reverse	R	
				1 hydraulic	1H	- If gearshifts do not occur, a clutch or brake may be defective
				1 mechanical	1M	
				2 hydraulic	2H	=> "Fault finding" binder, Power transmission, No. 14
				2 mechanical	2M	
				3 hydraulic	3 H	- Renew gearbox control unit -J217- => Automatic gearbox 01M; Repair group 37; Electrical and electronic components and fitting locations Electrical and electronic components and fitting locations
cont'd						- Initiate basic settings => page 15

1) When driving, a second mechanic is needed for reading the specified values.

Display Group No.	Display zone	Designation	Test conditions		VAS 5051 display specification	Rectifying fault
005	3	Gear to select	Driving1)	3 hydraulic	3M	- Check solenoid valves => Perform electrical check, from page 28
				4 hydraulic	4H	- If gearshifts do not occur, a clutch or brake may be defective
				4 mechanical	4M	=> "Fault finding" binder, Power transmission, No. 14 Renew gearbox control unit -J217- => Automatic gearbox 01M; Repair group 37; Electrical and electronic components and fitting locations Initiate basic settings => page 15

Protected by copyright. Copying for private or commercial purposes, in part or in whole, is not permitted unless authorised by Volkswagen AG. Volkswagen AG does not guarantee or accept any liability with respect to the correctness of information in this document. Copyright by Volkswagen AG.
satelettronica

	4	Engine speed	Driving1) with engine running	rpm	- Tune engine if necessary => Repair Groups 24 and 25 of respective engine code

1) When driving, a second mechanic is needed for reading the specified values.

Display Group No.	Display zone	Designation	Test conditions	VAS 5051 display specification	Rectifying fault
007	1	Gear selected1)	Neutral	0	- Check solenoid valves => perform electrical check, from page 28
			Reverse	R	- If gearshifts do not occur, a clutch or brake may be defective
			1 hydraulic	1H+/-	=> "Fault finding" binder, Power transmission, No. 14
			1 mechanical	1M+/-	- Replace gearbox control unit -J217-
					=> Automatic gearbox 01M; Repair group 37; Electrical and electronic components and fitting locations Electrical and electronic components and fitting locations
cont'd					**Note: the + or - sign is associated with the rpm value in display zone 2.**

1) When driving, a second mechanic is needed for reading the specified values.

Display Group No.	Display zone	Designation	Test conditions	VAS 5051 display specification	Rectifying fault
007	1	Gear selected1)	2 hydraulic	2H+/-	- Check solenoid valves => perform electrical check, from page 28
			2 mechanical	2M+/-	- If gearshifts do not occur, a clutch or brake may be defective
			3 hydraulic	3H+/-	=> "Fault finding" binder, Power transmission, No. 14
			3 mechanical	3M+/-	- Replace gearbox control unit -J217-
			4 hydraulic	4H +/-	=> Automatic gearbox 01M; Repair group 37; Electrical and electronic components and fitting locations Electrical and electronic components and fitting locations
			4 mechanical	4M +/-	- Initiate basic setting => page 15

Protected by copyright. Copying for private or commercial purposes, in part or whole, is not permitted unless authorised by Volkswagen AG. Volkswagen AG does not guarantee or accept any liability with respect to the correctness of information in this document. Copyright by Volkswagen AG.
satelettronica

cont'd					**Note: the + or - sign is associated with the rpm value in display zone 2.**

1) When driving, a second mechanic is needed for reading the specified values.

Display Group No.	Display zone	Designation	Test conditions		VAS 5051 display specification	Rectifying fault
007	2	Torque converter lock-up clutch slip	Whilst driving1) with engine running	In the hydraulic gears2)	0 ... stall speed	- Check wiring using current flow diagram Check solenoid valve 4 -N91- => Performing electrical checks, from page 28
cont'd		Solenoid valve 4 -N91- is activated	Torque converter lock-up clutch closed	Engine speed: 2000 ... 3000 rpm in the mechanical gears3)	0 ... 130 rpm	- Check gearbox => Automatic gearbox 01M; Repair group 37; Checking gearbox Checking gearbox If clutch is slipping or burnt: Renew torque converter and valve body => Automatic gearbox 01M; Repair group 32

1) When driving, a second mechanic is needed for reading the specified values.

2) The torque converter lock-up clutch must be open!

It is open when in display zone 1 "H" = hydraulic with slip is displayed. Additionally the character "+ or -" is displayed. "+" signifies that the engine speed (pump speed) is greater than turbine speed, vehicle under traction.

"-" signifies that the engine speed is less than turbine speed, vehicle in overrun.

3) The gear shift must be completed. The torque converter lock-up clutch must be closed and the accelerator pedal value held constant (gears will be mechanically activated "M").

Display Group No.	Display zone	Designation	Test conditions		VAS 5051 display specification	Rectifying fault
007	3	Engine speed	With engine running		... rpm	- If necessary tune engine => Repair group 24 or 25 of respective engine code
	4	Accelerator pedal value	Idling		0...1 %	When accelerating from idling to full throttle the percentage value constantly increases
				Full throttle	99...100 %	- Initiate basic setting => page 15

Protected by copyright. Copying for private or commercial purposes, in part or in whole, is not permitted unless authorised by Volkswagen AG. Volkswagen AG does not guarantee or accept any liability with respect to the correctness of information in this document. Copyright by Volkswagen AG.
satelettronica

7 - End output

7.1 - End output

- Continue switching VAS 5051 unit the diagnosis functions are displayed => Performing self-diagnosis; 5 .
- Press 06 - End output.
- Switch off ignition.
- Disconnect connection to VAS 5051.

Protected by copyright. Copying for private or commercial purposes, in part or in whole, is not permitted unless authorised by Volkswagen AG. Volkswagen AG does not guarantee or accept any liability with respect to the correctness of information in this document. Copyright by Volkswagen AG.

8 - Gearbox: Electrical check

8.1 - Gearbox: Electrical check

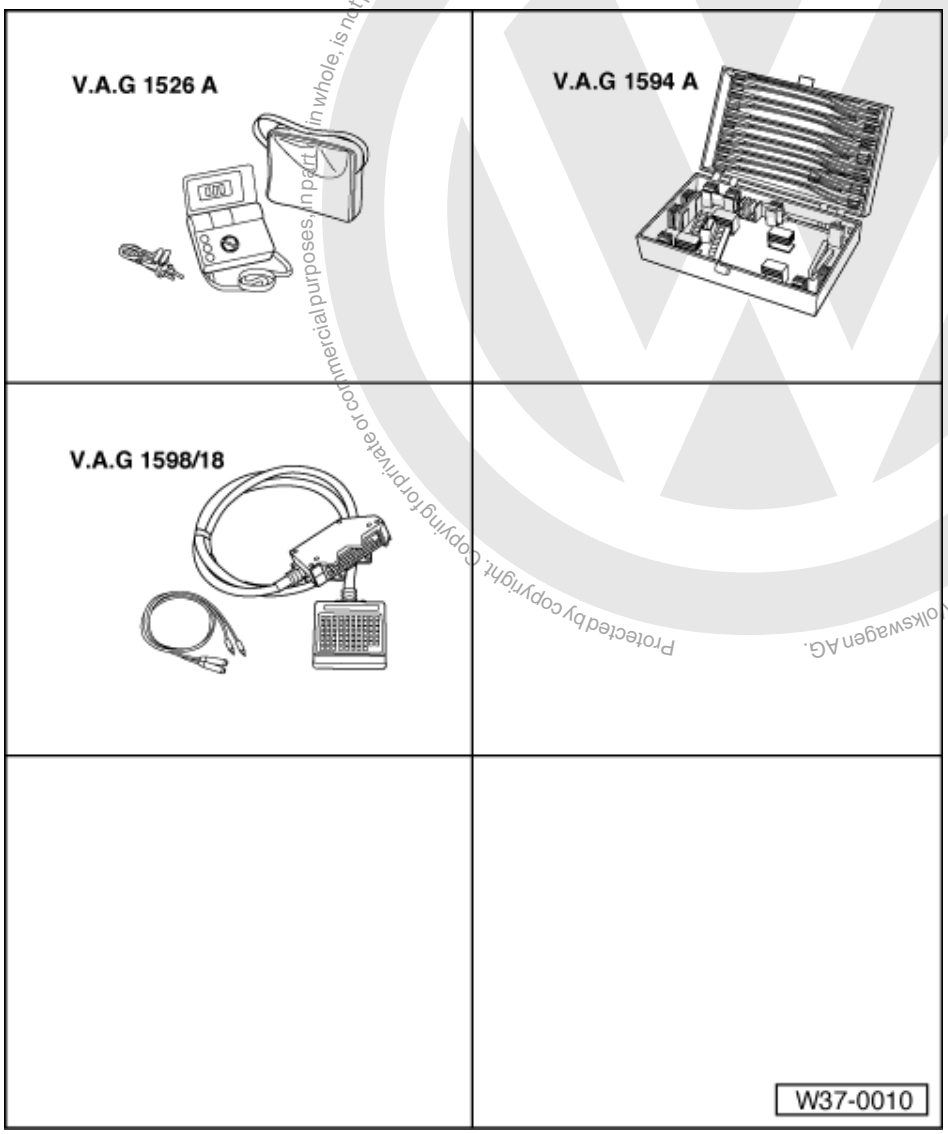

Special tools, testers and auxiliary items

- Hand multimeter V.A.G 1526 A
- Adapter set V.A.G 1594 A
- Test box V.A.G 1598/18
- VAS 5051 Vehicle diagnosis, testing and information system

satelettronica

If VAS 5051 is used, V.A.G 1526 A is not required.

Additional information required

- Workshop manual Caddy 1996 ‣, Polo Classic 1996 ‣, Polo estate 1998 ‣, Automatic gearbox 01M
- "Current flow diagrams, Electrical fault finding and Fitting locations"binder

Test requirements:

- Battery voltage in order.

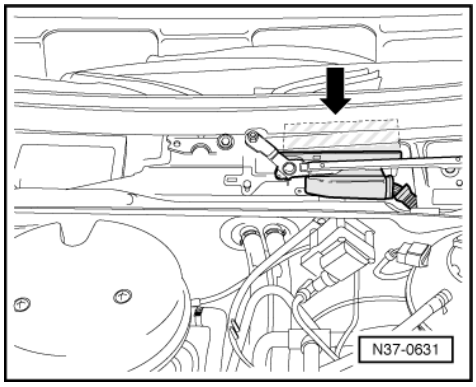

- Switch ignition and electrical consumers off before commencing the check (headlights, lighting, fan ...).
- Fuses in main fuse box OK.
- Fuses must be OK (remove fuses from fuse holder to check).

=> Current flow diagrams, Electrical fault finding and Fitting locations binder

-> The gearbox control unit (arrow) is located in the plenum chamber.

- Check earth connections for corrosion and poor contact; repair if necessary.

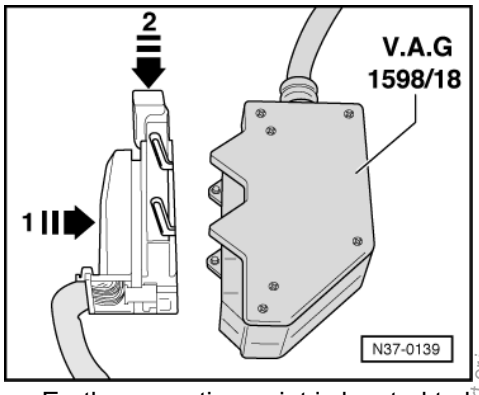

- Earth connection point is located to left of relay plate.
- Check battery earth strap and earth strap between battery and gearbox.
- Switch ignition off, release multi-pin connector and pull off control unit.
- -> Fit test box V.A.G 1598/18 onto multi-pin connector (1) and lock, in direction of arrow (2).

Using test box V.A.G 1598/18 the wiring can be checked according to current flow diagram.

- Before connecting the test leads the correct measuring range on tester must be adjusted. Otherwise the electronic components can be destroyed !

- The specified values are valid for an ambient temperature from 0 °C...40 °C.
- If the readings obtained differ from the specified values, determine fault on the basis of the current flow diagram.

Protected by copyright. Copying for private or commercial purposes, in part or in whole, is not permitted unless authorised by Volkswagen AG. Volkswagen AG does not guarantee or accept any liability with respect to the correctness of information in this document. Copyright by Volkswagen AG.
satelettronica

- If the readings obtained differ only slightly from the specified values, clean sockets and connectors of the testers and test leads and repeat test. Before replacing the particular components, test wiring and connections and, particularly if specified values are below 10 ω, repeat resistance measurement on component.

Control unit -J217- multi-pin connector (68 pin) assignment (sockets on V.A.G 1598/18)

1- Earth (terminal 31)	20- Road speed sender -G68-
2- Vacant	21- Gearbox speed sender -G38-
3- Data bus wire. Only for vehicles with data bus	22- Solenoid valve 6 -N93- supply voltage
4- Vacant	23- Supply voltage (terminal 15)
5- Throttle valve potentiometer -G69- signal	24- Diagnosis K-wire
6- Gearbox oil temperature (ATF) sender -G93-	25- Data bus wire. Only for vehicles with data bus
7- Vacant	26- Vacant
8- Vacant	27- Vacant
9- Solenoid valve 3 -N90-	28- Throttle valve potentiometer -G69- earth
10- Solenoid valve 7 -N94-	29- Selector lever lock solenoid -N110-
11- Park/neutral signal	30- Vacant
12- Kickdown for air conditioner	31- Vacant
13- Ignition timing influence	32- Vacant
14- Vacant	33- Vacant
15- Brake light switch -F- signal voltage	34- Vacant
16- Kickdown switch -F8-	35- Vacant
17- Vacant	36- Vacant
18- Multi-function switch -F125-	37- Vacant
19- TD (revolution) signal	38- Vacant

39- Vacant	54- Solenoid valve 2 -N89-
40- Multi-function switch -F125-	55- Solenoid valve 1 -N88-
41- Load signal from engine control unit. Only for vehicles with data bus	56- Solenoid valve 5 -N92-
42- Engine speed sender -G28- Diesel engine (screening)	57- Selector lever display
43- Road speed sender -G68- (screening)	58- Solenoid valve 6 -N93-
44- Gearbox speed sender -G38- (screening)	59- Vacant
45- Supply voltage (terminal 30)	60- Voltage supply (terminal 15)
46- Vacant	61- Cruise control system (output) => current flow diagram
47- Solenoid valve 4 -N91-	62- Multi-function switch -F125-
48- Vacant	63- Multi-function switch -F125-
49- Vacant	64- Engine speed sender -G28- (Diesel engine)
50- Throttle valve potentiometer -G69- (5 volt)	65- Road speed sender -G68-

Protected by copyright. Copyright by Volkswagen AG. Volkswagen AG does not guarantee or accept any liability with respect to the correctness of information in this document. Copyright by Volkswagen AG. Reproduction for private or commercial purposes in part or in whole, is not permitted unless authorised by Volkswagen AG.
satelettronica

51- Vacant	66- Gearbox speed sender -G38-
52- Vacant	67- Solenoid valves voltage supply
53- Vacant	68- Vacant

List of test steps (multi-pin connector with 68 pins) 1)

Component checked		Component checked	
Supply voltage from control unit -J217-	- Perform test step 1	Solenoid valve 6 -N93-	- Perform test step 10
Brake light switch -F-	- Perform test steps 2	Solenoid valve 7 -N94-	- Perform test step 11
Throttle valve potentiometer -G69-	- Perform test step 3	Kickdown switch -F8-	- Perform test step 12
Selector lever lock solenoid -N110-	- Perform test step 4	Gearbox oil temperature sender -G93- (ATF)	- Perform test step 13
Solenoid valve 1 -N88-	- Perform test step 5	Road speed sender -G68-	- Perform test step 14
Solenoid valve 2 -N89-	- Perform test step 6	Gearbox speed sender -G38-	- Perform test step 15
Solenoid valve 3 -N90-	- Perform test step 7	Multifunction switch -F125-	- Perform test step 16
Solenoid valve 4 -N91-	- Perform test step 8		
Solenoid valve 5 -N92-	- Perform test step 9		

1) Perform only the test steps listed in the fault table or in the measured value block according to component.

Protected by copyright. Copying for private or commercial purposes, in part or in whole, is not permitted unless authorised by Volkswagen AG. Volkswagen AG does not guarantee or accept any liability with respect to the correctness of information in this document. Copyright by Volkswagen AG.

8.2 - Test table

Switch to voltage measuring range 20 V					
Test step	V.A.G 1598/18 sockets	Test of	▪ Test conditions - Additional operations	Specified value	Rectifying fault
1	23 + 1 and 45 + 1	Supply voltage from control unit -J217-	▪ Ignition switched on	approx. battery voltage	- Check wiring using current flow diagram => "Current flow diagrams, Electrical fault finding and Fitting locations" binder
2	15 + 1	Brake light switch -F-	▪ Ignition switched on ▪ Brake pedal not depressed	0 V	- Check wiring using current flow diagram => "Current flow diagrams, Electrical fault finding and Fitting locations" binder

satelettronica

			- Brake pedal depressed	approx. battery voltage	- Adjust or renew brake light switch => Brake systems; Repair group 45; Adjusting brake light switch Adjusting brake light switch

Switch to resistance measuring range 20 k ω					
Test step	V.A.G 1598/18 sockets	Test of	▪ Test conditions - Additional operations	Specified value	Rectifying fault
3	5 + 28	Throttle valve potentiometer - G69-1)	▪ Ignition switched off Throttle pedal position: Idling min. Idling max.	0.7 kω 1.8 kω	- Check wiring using current flow diagram => "Current flow diagrams, Electrical fault finding and Fitting locations" binder - As the throttle is opened from idling to full throttle, the resistance changes continuously - Adjust throttle valve potentiometer, renew if necessary => Repair group 24 to 25 of respective engine code - Initiate basic setting => page 15
			Full throttle min. Full throttle max.	2.1 kω 3.9 kω	
	5 + 50	Throttle valve potentiometer - G69-1)	Idling min. Idling max.	2.1 kω 3.9 kω	
			Full throttle min. Full throttle max.	0.7 kω 1.8 kω	

1) Engine with Mono Motronic - Coolant temperature min. 80° C.Cannot be checked on vehicles with TDI and SDI engine or 4-cylinder engine with Simos and Motronic injection and ignition system, the throttle valve potentiometer -G69- signal is transmitted via engine control unit to gearbox control unit and can only be checked by measured value block => Page 15

Switch to resistance measuring range 200 ω					
Test step	V.A.G 1598/18 sockets	Test of	▪ Test conditions - Additional operations	Specified value	Rectifying fault
4	23 + 29	Selector lever lock solenoid - N110-	▪ Ignition switched off	14 to 25 ω	- Check wiring using current flow diagram => "Current flow diagrams, Electrical fault finding and Fitting locations" binder

Copyright by Volkswagen AG. Volkswagen AG does not guarantee or accept any liability with respect to the correctness of information in this document. Copyright by Volkswagen AG, in part or in whole, is not permitted unless authorised by Volkswagen AG for commercial purposes.
satelettronica

					- Renew selector lever lock solenoid -N110- => Automatic gearbox 01M; Repair group 37; Servicing gear selector mechanism Servicing gear selector mechanism
5	55 + 67	Solenoid valve 1 -N88-	▪ Ignition switched off	55 to 65 ω	- Check wiring using current flow diagram => "Current flow diagrams, Electrical fault finding and Fitting locations" binder
	55 + 1			infinite ω1)	
6	54 + 67	Solenoid valve 2 -N89-	▪ Ignition switched off	55 to 65 ω	- Renew valve chest => Automatic gearbox 01M; Repair group 38; Removing and installing valve chest Removing and installing valve chest

1) Switch V.A.G 1526 A to highest ωrange

Switch to resistance measuring range 200 ω					
Test step	V.A.G 1598/18 sockets	Test of	▪ Test conditions ▪ Additional operations	Specified value	Rectifying fault
7	9 + 67	Solenoid valve 3 -N90-	▪ Ignition switched off	55 to 65 ω	- Check wiring using current flow diagram => "Current flow diagrams, Electrical fault finding and Fitting locations" binder
	9 + 1			infinite ω1)	
8	47 + 67	Solenoid valve 4 -N91-	▪ Ignition switched off	4.5 to 6.5 ω	Renew valve chest => Automatic gearbox 01M; Repair group 38; Removing and installing valve chest Removing and installing valve chest
	47 + 1			infinite ω1)	
9	56 + 67	Solenoid valve 5 -N92-	▪ Ignition switched off	55 to 65 ω	-
	56 + 1			infinite ω1)	
10	58 + 22	Solenoid valve 6 -N93-	▪ Ignition switched off	4.5 to 6.5 ω	-
	58 + 1			infinite	=>

Protected by copyright. Copying for private or commercial purposes, in part or in whole, is not permitted unless authorised by Volkswagen AG. Volkswagen AG does not guarantee or accept any liability with respect to the correctness of information in this document. Copyright by Volkswagen AG.

satelettronica

	22 + 1			ω1)	

1) Switch V.A.G 1526 A to highest ωrange

Switch to resistance measuring range 200 ω					
Test step	V.A.G 1598/18 sockets	Test of	▪ Test conditions - Additional operations	Specified value	Rectifying fault
11	10 + 67	Solenoid valve 7 -N94-	▪ Ignition switched off	55 to 65 ω	-
	10 + 1			infinite ω1)	- Check wiring using current flow diagram => "Current flow diagrams, Electrical fault finding and Fitting locations" binder Renew valve chest => Automatic gearbox 01M; Repair group 38; Removing and installing valve chest Removing and installing valve chest
12	1 + 16	Kickdown switch -F8- (cannot be checked on TDI and SDI engines)	▪ Ignition switched off ▪ Accelerator not depressed	infinite ω1)	- Check wiring using current flow diagram => "Current flow diagrams, Electrical fault finding and Fitting locations" binder - Adjust or renew accelerator cable => Repair Group 20 of respective engine code
			- Depress accelerator as far as kickdown	less than 1.5 ω	

1) Switch V.A.G 1526 A to highest ωrange

Switch to resistance measuring range 2 Mω					
Test step	V.A.G 1598/18 sockets	Test of	▪ Test conditions - Additional operations	Specified value	Rectifying fault
13	6 + 67	Gearbox oil temperature sender -G93- (ATF)	▪ Ignition switched off		- Check wiring using current flow diagram => "Current flow diagrams, Electrical fault finding and Fitting locations" binder

Protected by copyright. Copying for private or commercial purposes, in part or in whole, is not permitted unless authorised by Volkswagen AG. Volkswagen AG does not guarantee or accept any liability with respect to the correctness of information in this document. Copyright by Volkswagen AG.

satelettronica

			▪ ATF temperature approx. 20 °C - Switch hand multimeter V.A.G 1526 A to 200 K ω approx. 60° C approx. 120° C	0.247 M ω 48.8 K ω 7.4 K ω	- Renew conductor strip => Automatic gearbox 01M; Repair group 38; Removing and installing valve chest Removing and installing valve chest

Switch to resistance measuring range 20 K ω					
Test step	V.A.G 1598/18 sockets	Test of	▪ Test conditions - Additional operations	Specified value	Rectifying fault
14	20 + 65	Road speed sender -G68-	▪ Ignition switched off min. max.	 0.8 Kω 0.9 K ω	- Check wiring on basis of current flow diagram => "Current flow diagrams, Electrical fault finding and Fitting locations" binder - Renew road speed sender -G68- => Automatic gearbox 01M; Repair group 37; Electric and electronic components and fitting locations Electric and electronic components and fitting locations
15	21 + 66	Gearbox speed sender -G38-	▪ Ignition switched off min. max.	 0.8 Kω 0.9 K ω	- Check wiring using current flow diagram => "Current flow diagrams, Electrical fault finding and Fitting locations" binder - Renew gearbox speed sender -G38 => Automatic gearbox 01M; Repair group 37; Electric and electronic components and fitting locations Electric and electronic components and fitting locations

Switch to resistance measuring range 200 ω

Protected by copyright. Copying for private or commercial purposes, in part or in whole, is not permitted unless authorised by Volkswagen AG. Volkswagen AG does not guarantee or accept any liability with respect to the correctness of information in this document. Copyright by Volkswagen AG.
satelettronica

Test step	V.A.G 1598/18 sockets	Test of	▪ Test conditions - Additional operations	Specified value	Rectifying fault
16	63 + 1	Multi-function switch -F125-	- Selector lever positions R, N, D, 3 and 2	infinite ω1)	- Check wiring using current flow diagram => "Current flow diagrams, Electrical fault finding and Fitting locations" binder
			- Selector lever positions P and 1	0.8 to1 ω	- Renew multi-function switch -F125- => Automatic gearbox 01M; Repair group 37; Electric and electronic components and fitting locations Electric and electronic components and fitting locations
	40 + 1		- Selector lever positions P, R, 2 and 1	infinite ω1)	
cont'd			- Selector lever positions N, D and 3	0.8 to 1 ω	

1) Switch V.A.G 1526 to highest ω range

Switch to resistance measuring range 200 ω					
Test step	V.A.G 1598/18 sockets	Test of	▪ Test conditions - Additional operations	Specified value	Rectifying fault
16	62 + 1	Multi-function switch -F125-	- Selector lever positions P, R, N and D	infinite ω1)	- Check wiring using current flow diagram => "Current flow diagrams, Electrical fault finding and Fitting locations" binder
			- Selector lever positions 3, 2 and 1	0.8 to 1 ω	- Renew multi-function switch -F125- => Automatic gearbox 01M; Repair group 37; Electric and electronic components and fitting locations Electric and electronic components and fitting locations
	18 + 1		Switch to voltage measuring range 20V		
			- Selector lever positions P, R, and N	approx. battery voltage	

Protected by copyright. Copying for private or commercial purposes, in part or in whole, is not permitted unless authorised by Volkswagen AG. Volkswagen AG does not guarantee or accept any liability with respect to the correctness of information in this document. Copyright by Volkswagen AG.

satelettronica

			- Selector lever positions D, 3, 2 and 1	0 V	

1) Switch V.A.G 1526 to highest ω range

9 - Definitions

9.1 - Definitions

These explanations refer only to this assembly group: Self-diagnosis for automatic gearbox 01M. These definitions are not necessarily generally valid.

ABS

Anti-locking brake system. Further information on the ABS can be found in the relevant self-study programmes.

ATF (Automatic Transmission Fluid)

Gearbox oil for automatic gearbox

Display zone => Read measured value block

Display group number => Read measured value block

Data bus

Transportation of data. To do this the electrical signals are brought into a certain format (bus). Further information on this can be found in Self-study programme No. 186.

Data bus low (high)

The voltage used to transport the data is low (high). Further information on this can be found in self-study programme no. 186.

Throttle valve potentiometer

An engine component. The "throttle valve signal" originates from here.

Throttle valve control part

An engine component to stabilize the idling speed. The "throttle valve signal" originates from here. Further information on the throttle valve control unit can be found in self-study programme no.173.

Self-diagnosis

The capability of the control unit:

to recognise faults,

to react to faults,

to store faults,

to register faults and make them available in the measured value block.

Performing self-diagnosis

Connecting the fault reader to be able to interrogate the fault memory.

Protected by copyright. Copyright by Volkswagen AG. Volkswagen AG does not guarantee or accept any liability with respect to the correctness of information in this document. Copyright by Volkswagen AG. Protected by copyright. Copyright by Volkswagen AG. Volkswagen AG does not guarantee or accept any liability with respect to the correctness of information in this document. Copyright by Volkswagen AG. Protected by copyright. Copyright by Volkswagen AG. Volkswagen AG does not guarantee or accept any liability with respect to the correctness of information in this document. Copyright by Volkswagen AG. Protected by copyright. Copyright by Volkswagen AG. Volkswagen AG does not guarantee or accept any liability with respect to the correctness of information in this document. Copyright by Volkswagen AG.
satelettronica

Performing electrical check

A targeted check of the electronic components by performing certain measurements.

Electronic power control (EPC)

Terms like: EPC, electronic accelerator, accelerator module and electric throttle operation all refer to this component. Among other things, senders -G79- and -G185- and a throttle valve positioner are housed within.

EPC is always a component of engine control and thus communicates initially with the engine control unit. Because when doing this, for example, the signal for the kickdown switch is also generated, the engine control unit stores the data in the data bus, in order that other control units have access to it.

Further information on this subject can be found in

- Self-study programme no. 210.

Vehicle diagnosis, testing and information system VAS 5051

Terms such as tester, fault reader, VAS 5051 refer to this device.

Further information on this subject can be found in self-study programme no. 202.

Throttle position sender

=>Electronic power control (EPC)

Gearbox speed sender -G38-

The sender records the speed of -K3- and transmits it to the automatic gearbox control unit.

Road speed sender -G68-

The sender records the speed of the output gear and transmits it to the automatic gearbox control unit (not to the speedometer).

Guided fault finding

One of the VAS 5051's three operating modes. The other two are "Vehicle self-diagnosis" and "Test instruments".

Initiating basic setting

The values learnt in the control unit are turned back to the initial values.

No communication

There is no connection for exchanging information between the control units.

Kickdown switch -F8-

The kickdown switch is integrated into the accelerator cable. When the accelerator pedal is depressed fully onto its stop the gearbox changes down for acceleration.

Short to earth

Current flows -incorrectly- to earth without supplying a consumer.

Short to positive

Current flows -incorrectly- to a live component without supplying a consumer.

Protected by copyright. Copying for private or commercial purposes, in part or in whole, is not permitted unless authorised by Volkswagen AG. Volkswagen AG does not guarantee or accept any liability with respect to the correctness of information in this document. Copyright by Volkswagen AG.

satelettronica

Wiring

Routing of electrical wiring and components in vehicle.

Selector lever lock magnet -N110-

Located in the selector mechanism close to the selector lever. Prevents movement (involuntary) of the selector lever from positions "P" and "N" as long as the brake pedal is not depressed.

Solenoid valves

Opens and closes the oil channels to the clutches and brakes.

Read measured value block

The control unit can transfer a considerable amount of test data. This test data delivers information on the operational condition of the system and/or sensors connected to it. In many cases the transferred test data supports fault finding and fault rectification. The test data has been summarized into single display groups because all the information cannot be evaluated at the same time. The information can be selected via display group numbers.

Each display group number is displayed on the VAS 5051 with four display zones.

A display zone can be displayed as a series of eight digits or as values. Some of these values are displayed with a symbol indicating units.

Emergency running

"Condition of the control unit" when certain faults are recognised in order to maintain driving safety, to protect the gearbox against damage and at the same time to ensure that driving characteristics are impaired as little as possible.

Pendulum support

Designation for a part of the assembly mounting.

Sporadic

Happens occasionally

Stationary uncoupling

The gearbox shifts into neutral hydraulically when the vehicle is stationary.

Static

Present at the moment, continuous

TDC signal

The signal is used to calculate the engine speed.

Infinity ω

The resistance is infinite, open circuit.

ω = Ohm

TCC (Torque converter lock-up clutch)

Transfers the engine torque mechanically to the gearbox.

Protected by copyright. Copying for private or commercial purposes, in part or in whole, is not permitted unless authorised by Volkswagen AG. Volkswagen AG does not guarantee or accept any liability with respect to the correctness of information in this document. Copyright by Volkswagen AG.
satelettronica

VAS 5051

=> Vehicle diagnosis, testing and information system VAS 5051; 38

Ignition key withdrawal lock

Ensures that the ignition key can only be withdrawn when park position is selected and in addition mechanically locks the selector lever in this position.

Ignition timing control

The engine torque is reduced during the gear shift process by altering the ignition timing.

Protected by copyright. Copying for private or commercial purposes, in part or in whole, is not permitted unless authorised by Volkswagen AG. Volkswagen AG does not guarantee or accept any liability with respect to the correctness of information in this document. Copyright by Volkswagen AG.

satelettronica